SFU

Chapter 3

Manipulator Kinematics

Overview

This chapter covers the following topics:

- Link Description and Link-connection description
- Convention for Affixing Frames to Links
- Identification of Denavit & Hartenberg Parameters
- Manipulator Kinematics

3.2 Link Description

Kinematics is the science of motion that treats the objects without regard to the forces that cause it.

A **manipulator** is thought of as a set of bodies (called **links**) connected in a chain by joints. A link is considered only as a rigid body that defined the relationship between two neighboring joint axes of a manipulator.

Joints form a connection between a neighboring pair of links.

In **lower pairs**, the relative motion between a pair of bodies is characterized by two surfaces sliding over one another.

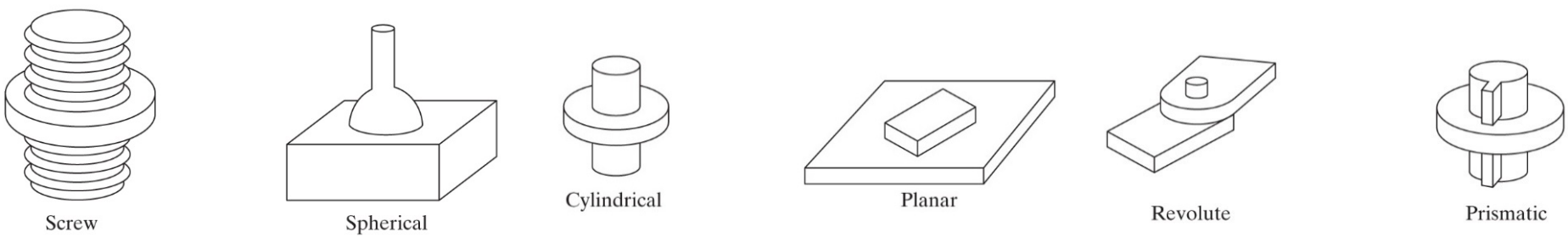

The six possible lower pair joints.

3.2 Link Description

Convention: The links are numbered starting from the immobile base of the arm, which might be called link 0. The first moving body is link 1, and so on, out to the free end of the arm, which is link n.

Convention: Joint axis i is defined by a line in space, or a vector direction, about which link i rotates relative to link $i-1$.

For any two axes in 3-space, there exists a well-defined measure of distance, the **link length** (a_{i-1}), that is along a line mutually perpendicular to both axes.

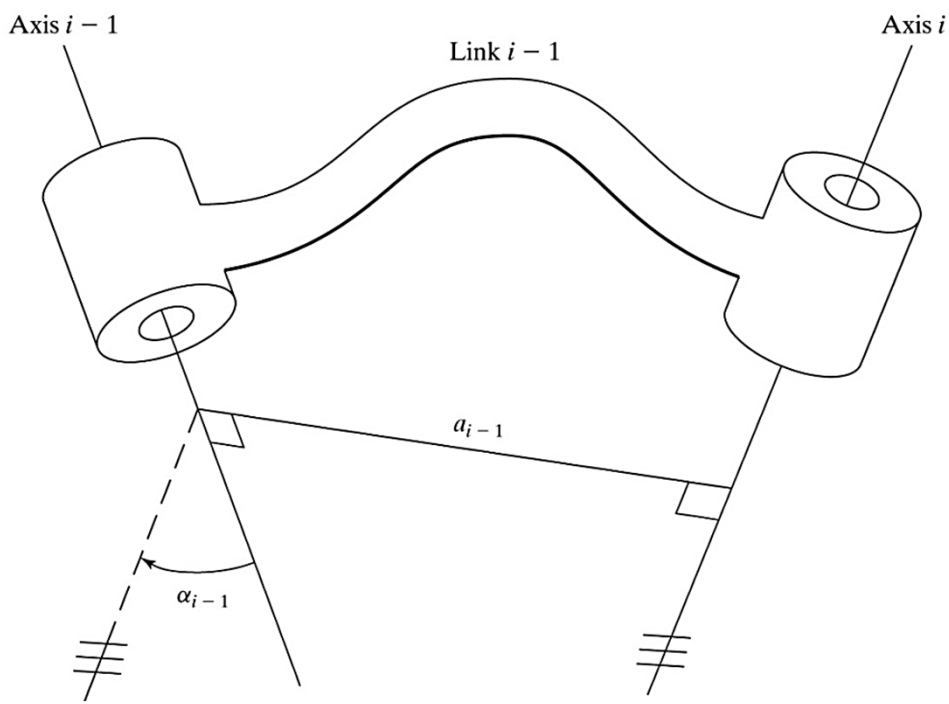

3.2 Link Description

The **link twist**, α_{i-1}, defines the relative location of two axes. The angle is measured from axis a_{i-1} to axis a_i in the right-hand sense about a_{i-1}.

Note: for right-hand sense, a_{i-1} is given the direction pointing from axis $i-1$ to axis i.

Note: In the case of intersecting axes, twist is measured in the plane containing both axes, but the sense of α_{i-1} is lost. In this case, the sign of the α_{i-1} can be assigned arbitrarily.

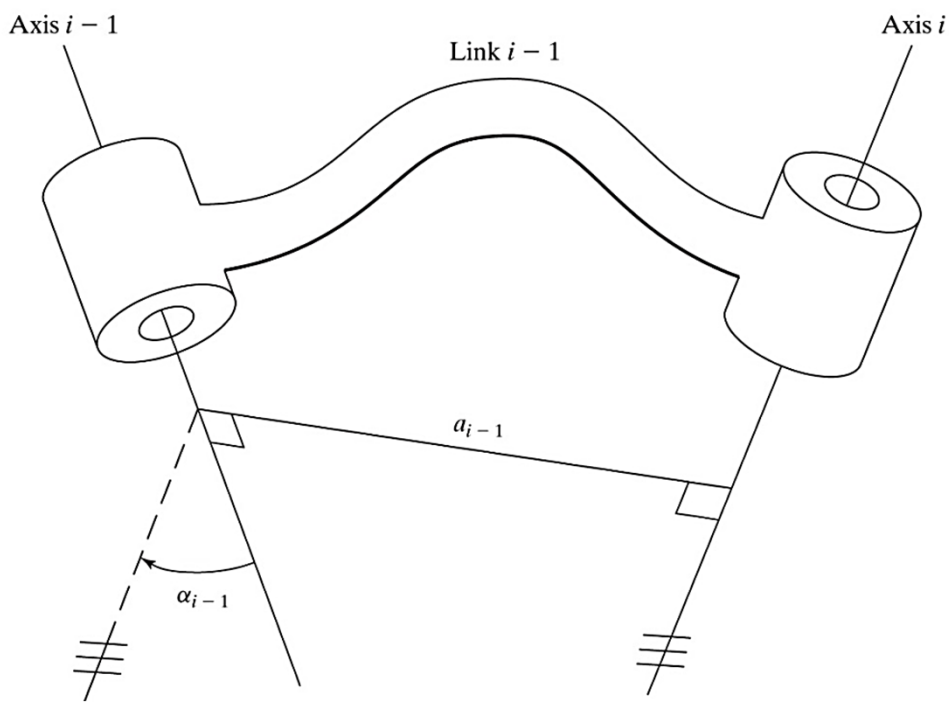

3.2 Link Description

Example: Figure below shows the mechanical drawings of a robot link. If this link is used in a robot, with bearing "A" used for the lower-numbered joint, identify the length and twist of the link. Assume that holes are centered in each bearing.

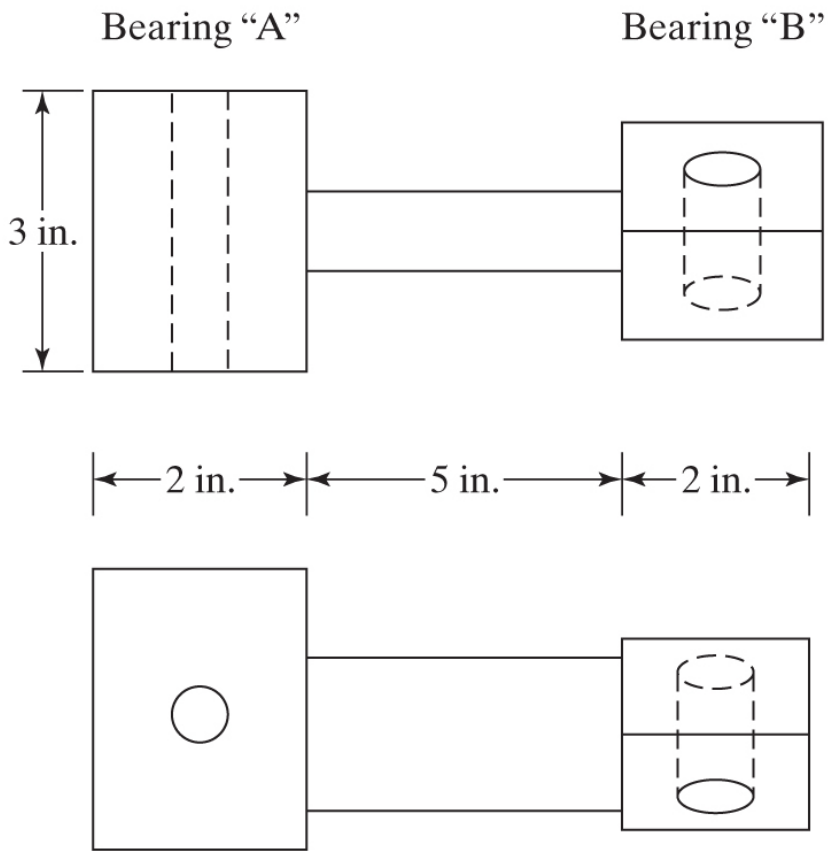

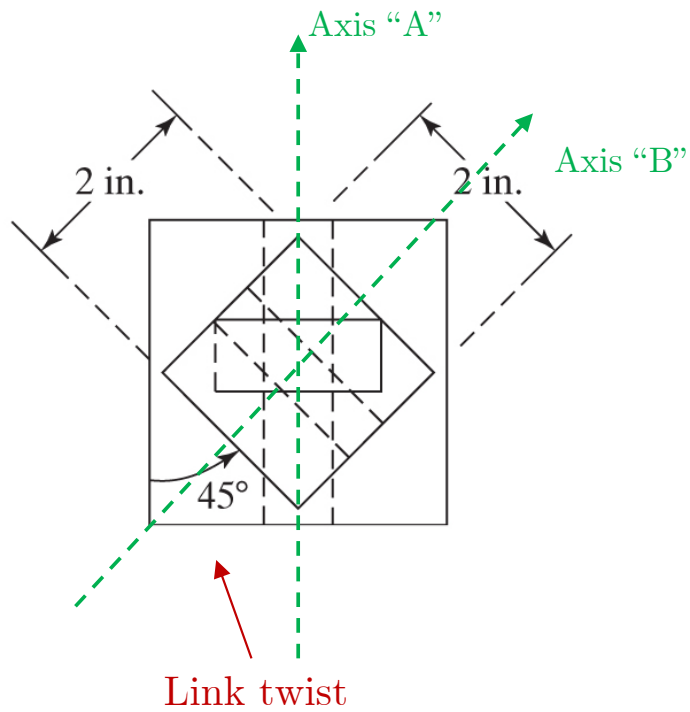

Link length = 7 *in.*

3.3 Link-Connection Description – Intermediate Links in the Chain

The distance along the joint axis between two incident common normals (a_{i-1} and a_i) is called **link offset**, d_i. The link offset is variable if joint i is prismatic.

The rotation between two incident normal about the joint axis is called **joint angle**, θ_i. The joint angle is variable for revolute joints .

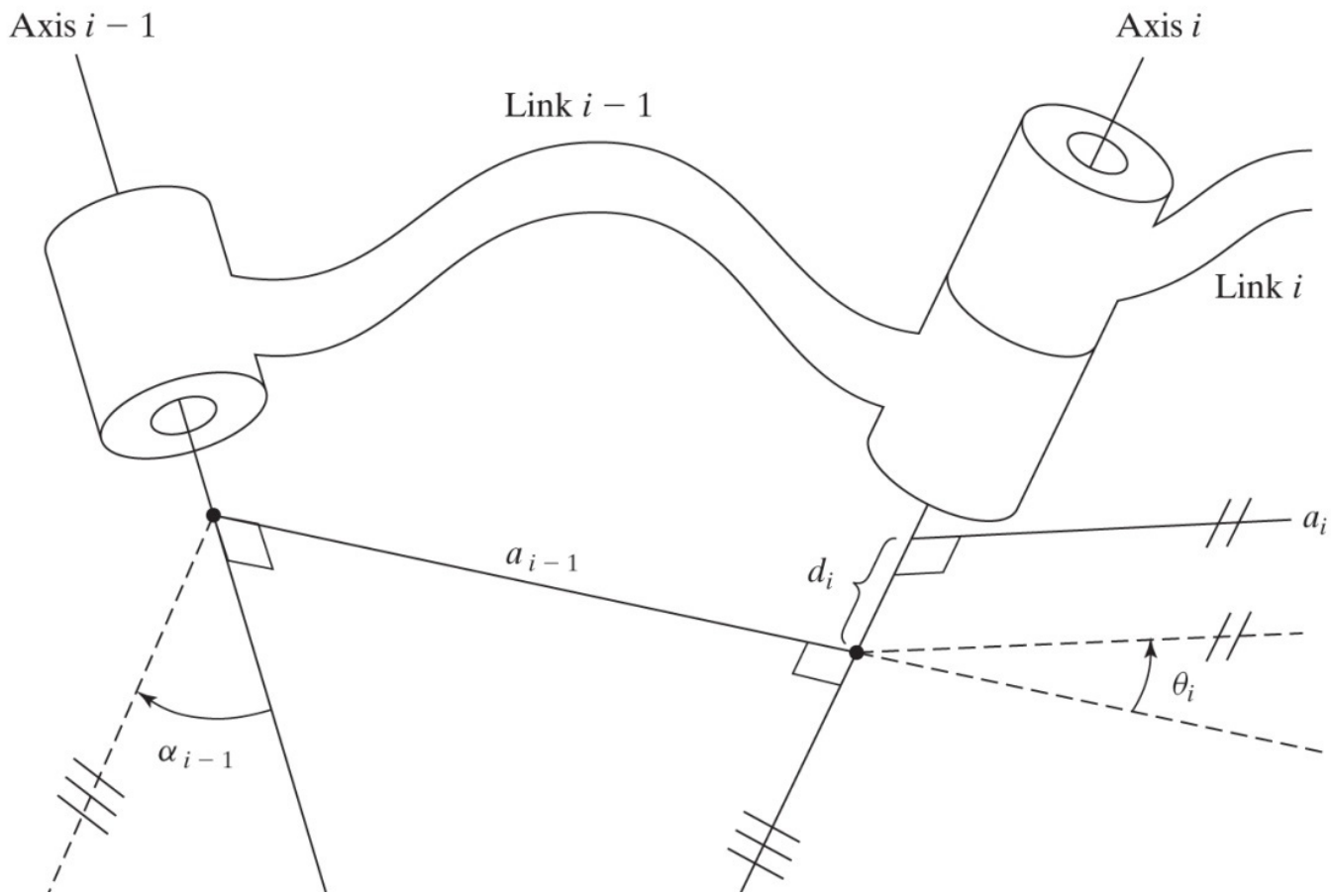

3.3 Link-Connection Description – First & Last Links in the Chain

<u>*Convention*</u>: Link length, a_i, and link twist, α_i, depend on joint axes i and $i+1$, as shown before. At the ends of the chain, the convention is to assign zero to these quantities, that is, $a_0 = a_n = 0$ and $\alpha_0 = \alpha_n = 0$.

- If joint 1 is revolute, the zero position for θ_1 may be chosen arbitrarily; $d_1 = 0$ is the convention used here.

- If joint 1 is prismatic, the zero position of d_1 may be chosen arbitrarily; $\theta_1 = 0$ is the convention used here.

Denavit & Hartenberg Parameters:

- Link Parameters:
  - ✓ Link length, a_{i-1}
  - ✓ Link twist, α_{i-1}
  - ✓ Link offset, d_i

- Joint Parameter
  - ✓ Joint angle, θ_i

3.4 Convention for Affixing Frames to Links – Intermediate Links

- The $\hat{Z}_i - \text{axis}$ of frame $\{i\}$, called $\hat{Z}_i$, is coincident with the joint axis i.
- The origin of frame $\{i\}$ is located where the a_i perpendicular intersects the joint i axis.
- $\hat{X}_i$ points along a_i in the direction from joint i to $i+1$
  - In the case of $a_i = 0$, $\hat{X}_i$ is normal to the plane of $\hat{Z}_i$ and $\hat{Z}_{i+1}$. Then, α_i is measured in the right-hand sense about $\hat{X}_i$.
- $\hat{Y}_i$ is formed by the right-hand rule using $\hat{X}_i$ and $\hat{Z}_i$ in Cartesian frame.

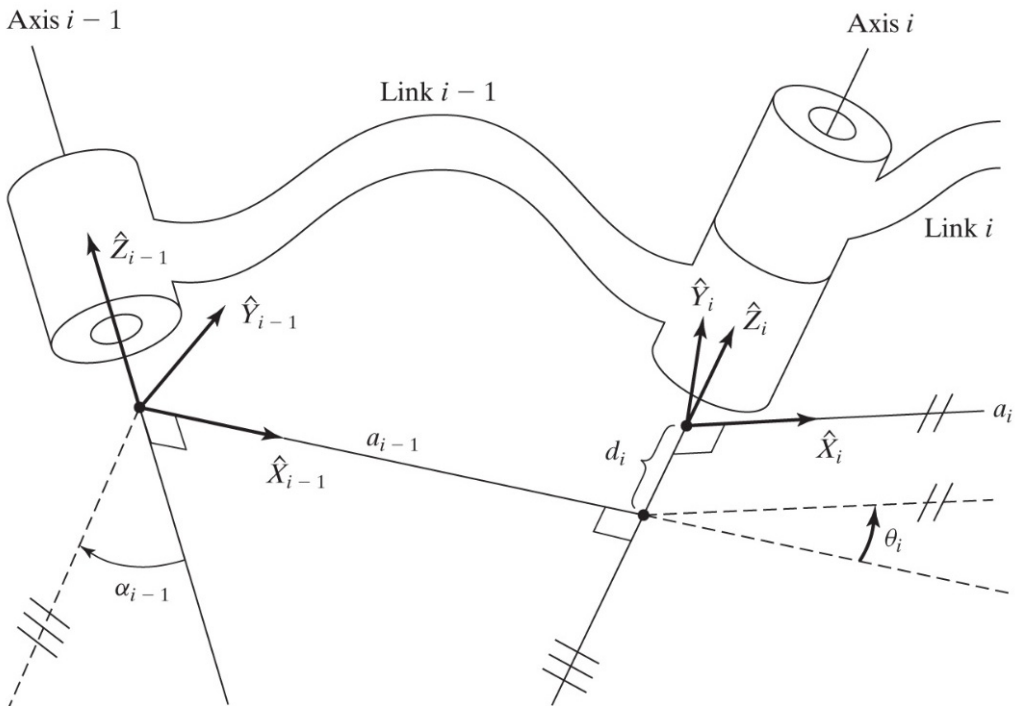

3.4 Convention for Affixing Frames to Links – First & Last Links

First link: A non-moving frame is attached to the base of the robot, or link 0, called frame {0}. It coincides with frame {1}. Therefore, we always have $a_0 = 0$ and $\alpha_0 = 0$.

- If joint 1 is revolute, link offset is $d_1 = 0$.
- If joint 1 is prismatic, joint angle is $\theta_1 = 0$.

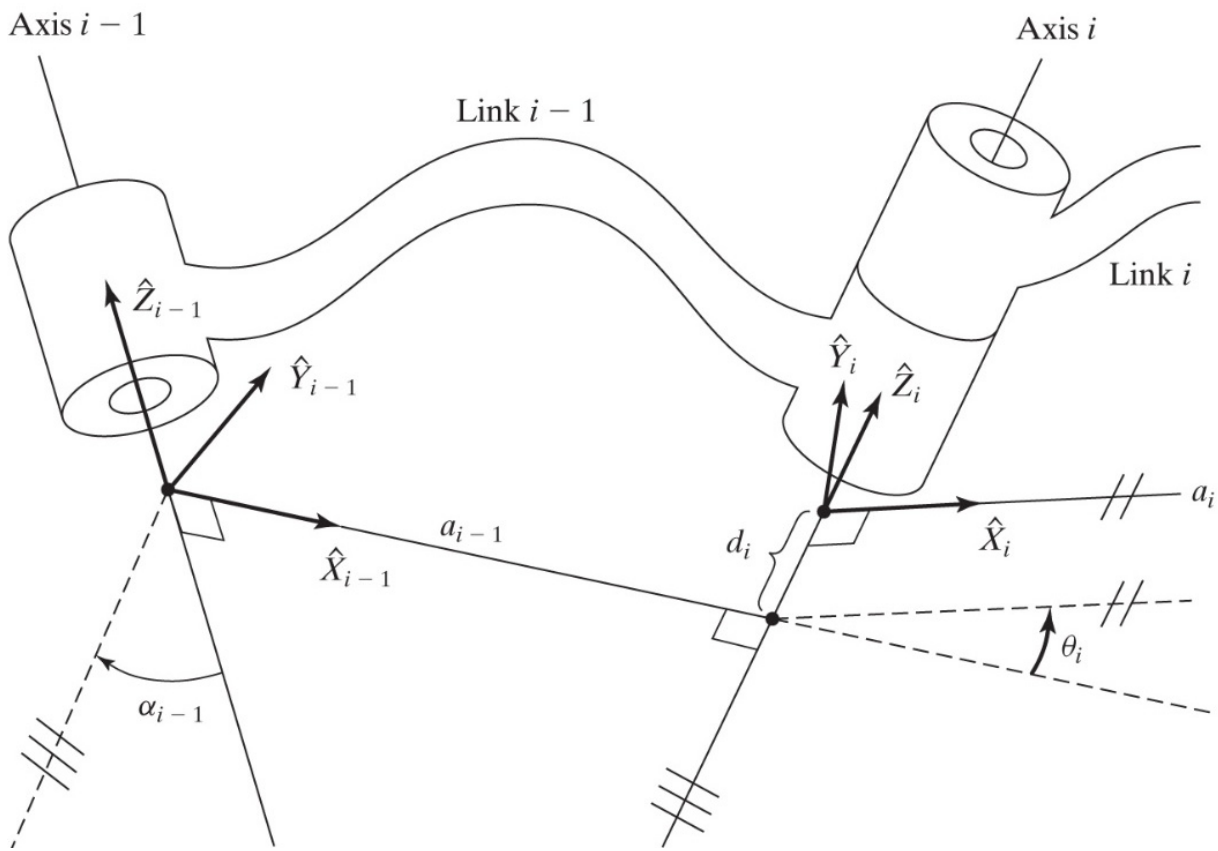

3.4 Convention for Affixing Frames to Links – First & Last Links

Last link:

- If joint n is revolute, the direction of $\hat{X}_N$ is chosen so that it aligns with $\hat{X}_{N-1}$ when $\theta_n = 0$. The origin of frame $\{N\}$ is chosen so that $d_n = 0$.
- If joint n is prismatic, the direction of $\hat{X}_N$ is chosen so $\theta_n = 0$. The origin of frame $\{N\}$ is chosen at the intersection of $\hat{X}_{N-1}$ and joint axis n when $d_n = 0$.

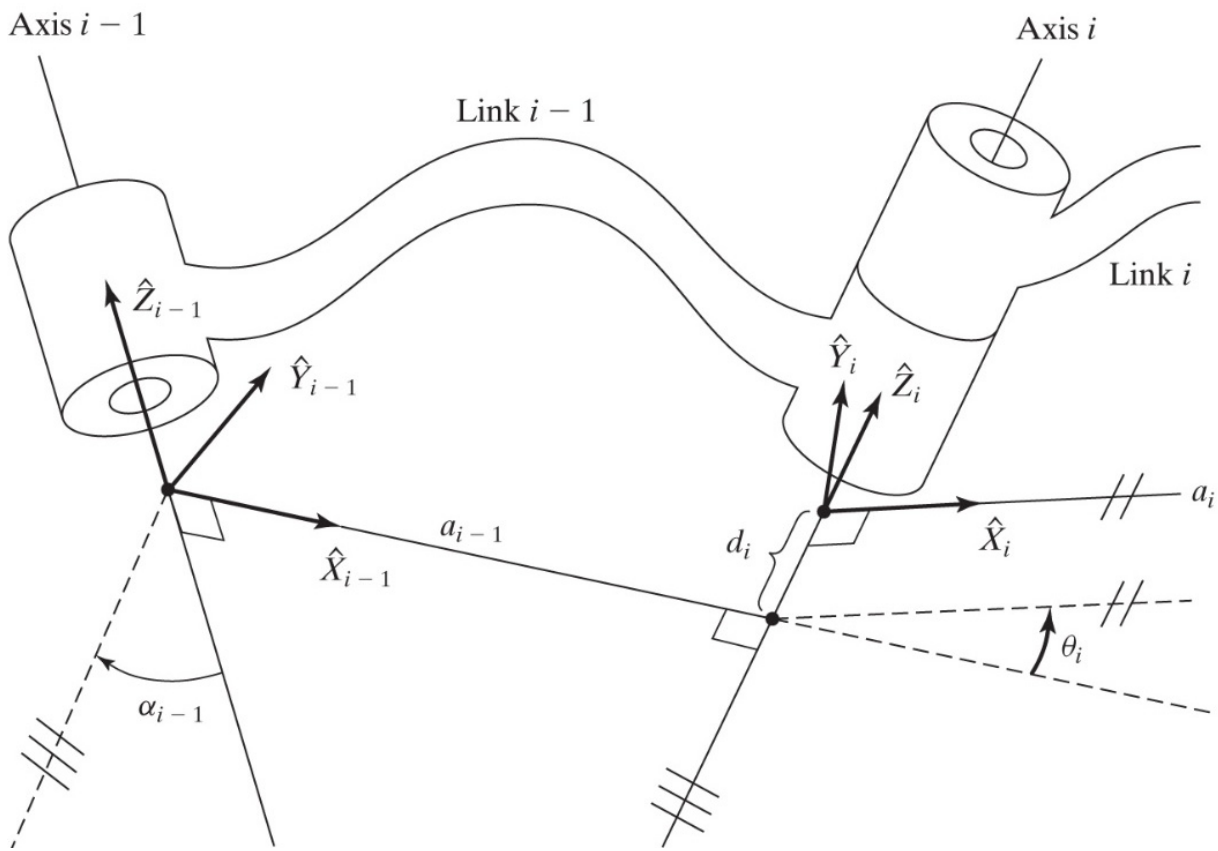

Summary of the Link Parameters in Terms of the Link Frames:

- a_i = the distance from $\hat{Z}_i$ to $\hat{Z}_{i+1}$ measured along $\hat{X}_i$.
- α_i = the angle from $\hat{Z}_i$ to $\hat{Z}_{i+1}$ measured about $\hat{X}_i$.
- d_i = the distance from $\hat{X}_{i-1}$ to $\hat{X}_i$ measured along $\hat{Z}_i$.
- θ_i = the angle from $\hat{X}_{i-1}$ to $\hat{X}_i$ measured about $\hat{Z}_i$.

Summary of the Link-Frame Attachment Procedure:

1. Identify joint axes (assume infinite lines)
2. Identify the common normal between consecutive axes i and $i+1$. Assign the origin of the ith link frame at the point where the common normal intersects axis i. If axes i and $i+1$ intersect, assign the origin at the intersection point.
3. Assign the $\hat{Z}_i$ axis pointing along the ith joint axis.
4. Assign the $\hat{X}_i$ axis pointing along the common normal, or if the axes intersect, assign the $\hat{X}_i$ axis to be normal to the axes plane.
5. Assign the $\hat{Y}_i$ axis to complete the right-hand frame convention.
6. Assign frame $\{0\}$ to be fixed. It coincides with frame $\{1\}$ when $\theta_1 = 0$ or $d_1 = 0$. Assign frame $\{e.e.\}$ at the end-effector's point.

3.4 Convention for Affixing Frames to Links

Example: Figure below shows a three-link planar arm. Because all three joints are revolute, this manipulator is sometimes called an $\boldsymbol{RRR}$ (or $\boldsymbol{3R}$) mechanism. A schematic representation is presented in (b).

a) Assign link frames to the mechanism

b) Find the Denavit – Hartenberg parameters.

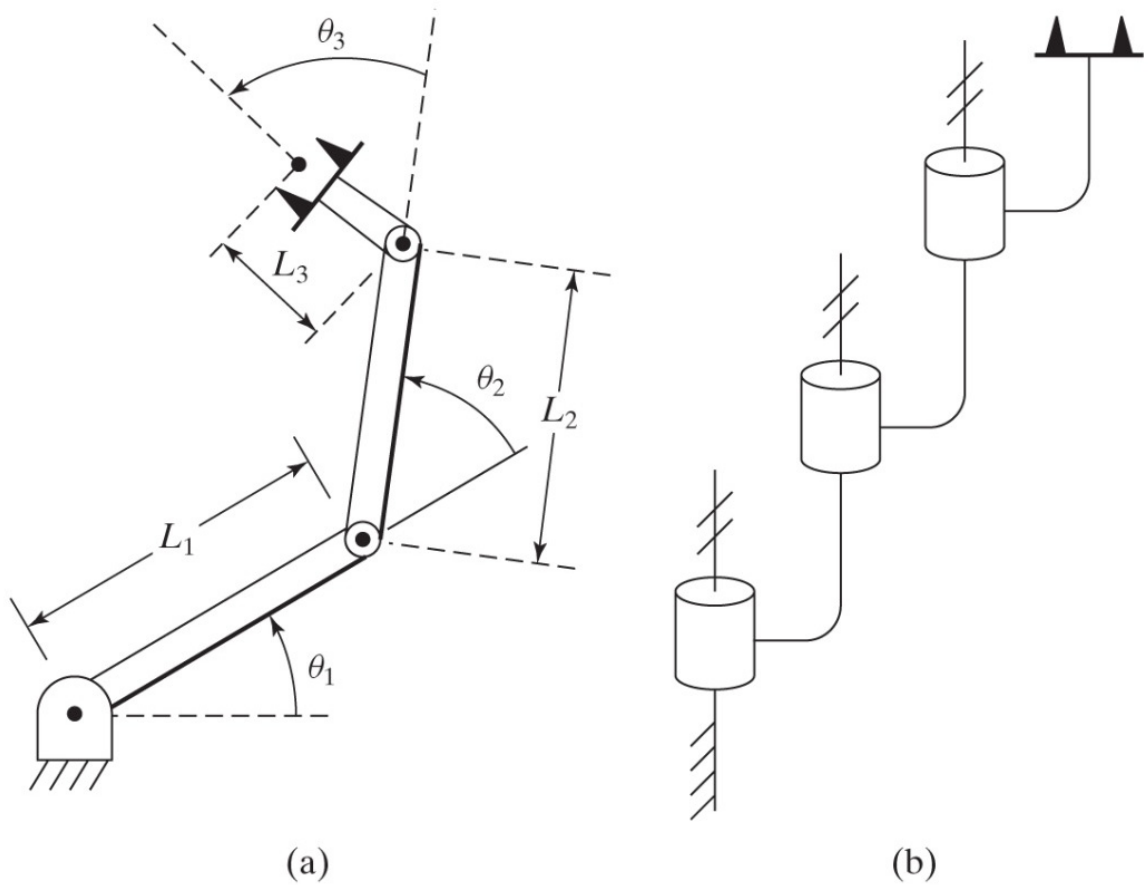

3.4 Convention for Affixing Frames to Links

Example: cont'd.

a) Link frame assignment

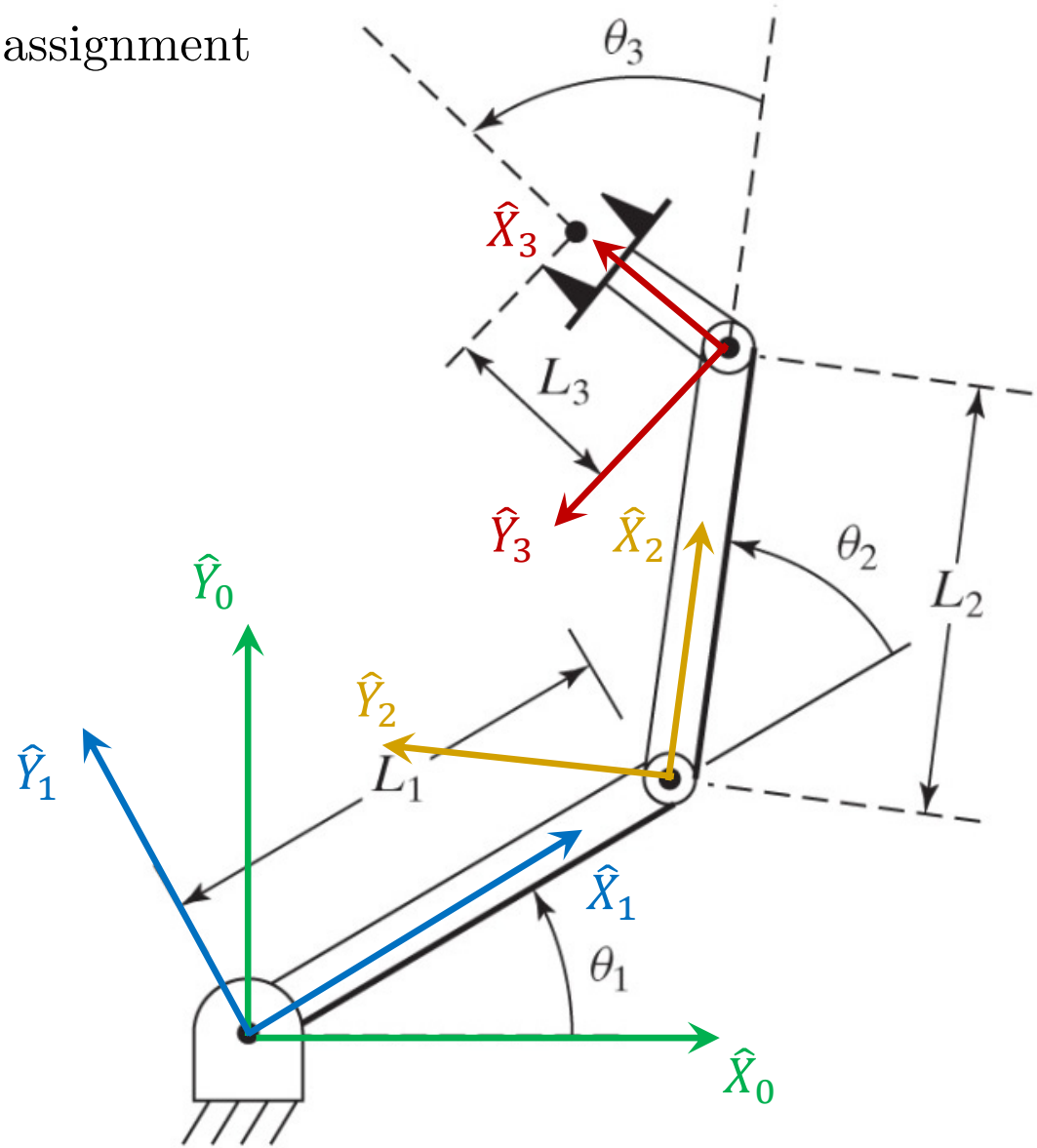

3.4 Convention for Affixing Frames to Links

Example: cont'd.

a) Denavit – Hartenberg Parameters

i	α_{i-1}	a_{i-1}	d_i	θ_i
1	0	0	0	θ_1
2	0	L_1	0	θ_2
3	0	L_2	0	θ_3
e.e.	0	L_3	0	0

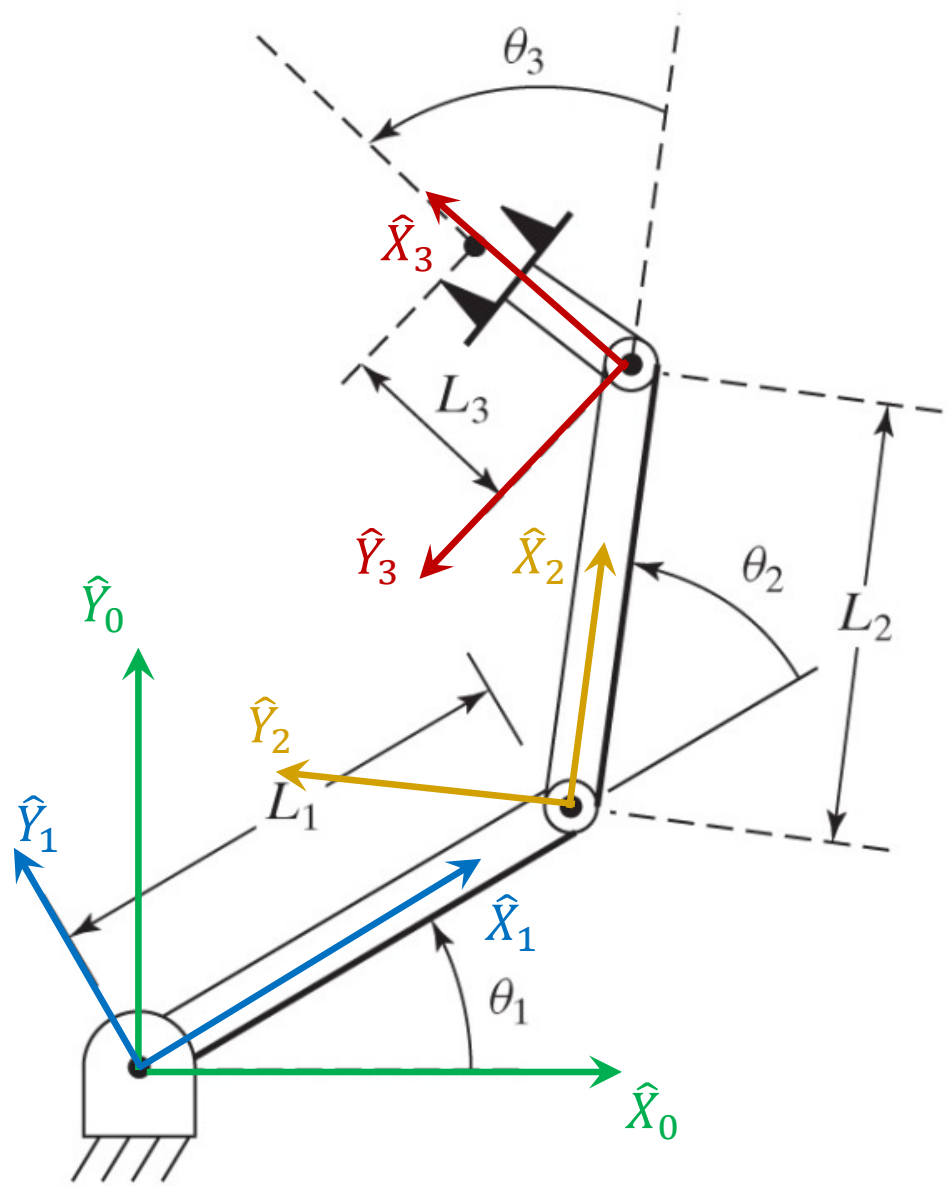

3.5 Manipulator Kinematics – Derivation of Link Transformations

Now that the frames are attached to the links and the Denavit and Hartenberg parameters are identified, the next step is to establish a quantitative connection between each link frame and its precedent.

The homogeneous transform ${}^{i-1}_{i}T$ is obtained through a series of intermediate frames, each containing a parameter.

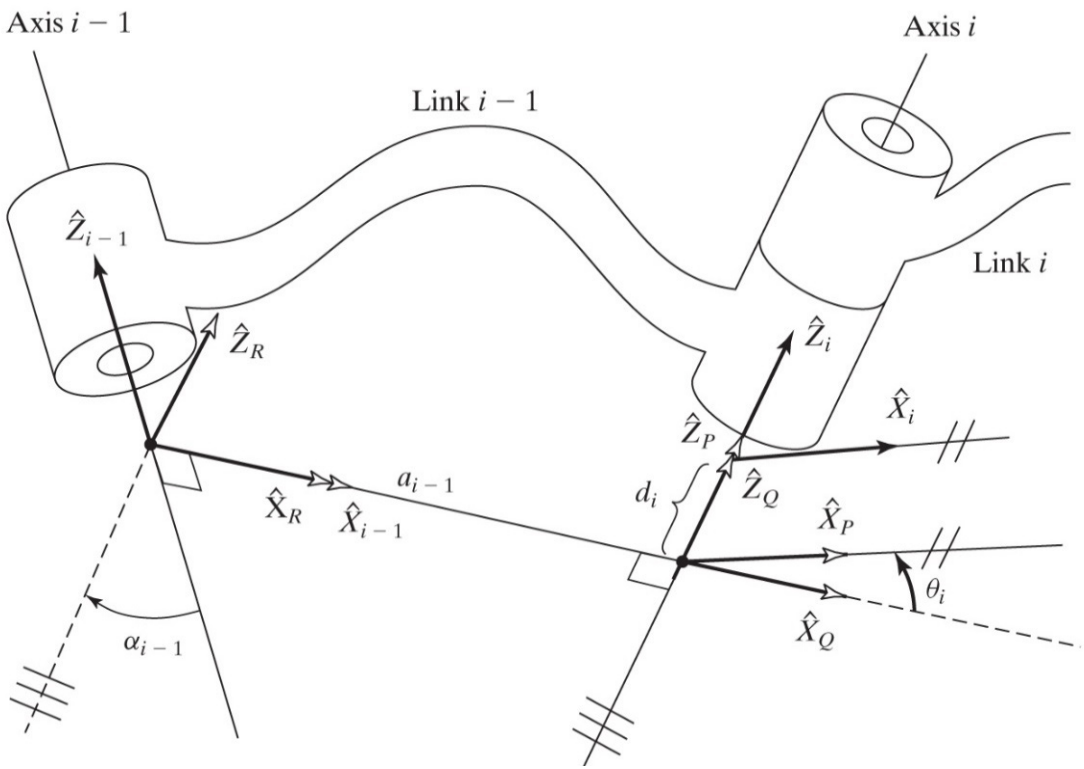

It is desirable to write the transformation that transforms vectors defined in $\{i\}$ to their description in $\{i+1\}$.

3.5 Manipulator Kinematics – Derivation of Link Transformations

Applying the "super-sub-script cancellation law",

$$ {}^{i-1}_{\ \ i}T = {}^{i-1}_{\ \ R}T \ {}^{R}_{Q}T \ {}^{Q}_{P}T \ {}^{P}_{i}T $$

Hence:

$$ {}^{i-1}P = {}^{i-1}_{\ \ i}T \ {}^{i}P $$

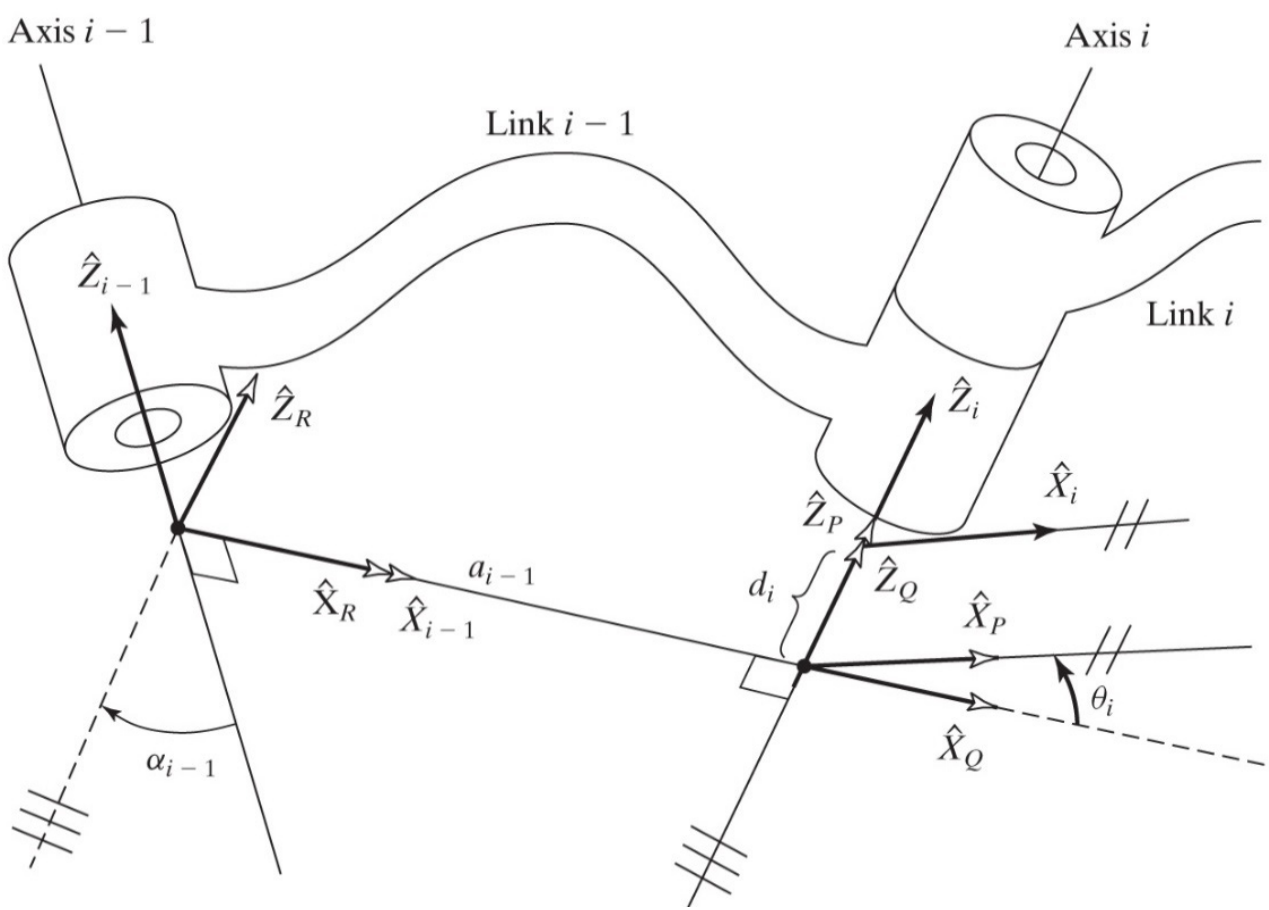

3.5 Manipulator Kinematics – Derivation of Link Transformations

For ${}^{i-1}_{i}T = {}^{i-1}_{R}T \; {}^{R}_{Q}T \; {}^{Q}_{P}T \; {}^{P}_{i}T$ we have

$$ {}^{i-1}_{R}T = \begin{bmatrix} & R_X(\alpha_{i-1}) & & \begin{matrix}0\\0\\0\end{matrix} \\ 0 & 0 & 0 & 1 \end{bmatrix} = \begin{bmatrix} 1 & 0 & 0 & 0 \\ 0 & c\alpha_{i-1} & -s\alpha_{i-1} & 0 \\ 0 & s\alpha_{i-1} & c\alpha_{i-1} & 0 \\ 0 & 0 & 0 & 1 \end{bmatrix} $$

$$ {}^{Q}_{P}T = \begin{bmatrix} & R_Z(\theta_i) & & \begin{matrix}0\\0\\0\end{matrix} \\ 0 & 0 & 0 & 1 \end{bmatrix} = \begin{bmatrix} c\theta_i & -s\theta_i & 0 & 0 \\ s\theta_i & c\theta_i & 0 & 0 \\ 0 & 0 & 1 & 0 \\ 0 & 0 & 0 & 1 \end{bmatrix} $$

$$ {}^{R}_{Q}T = \begin{bmatrix} & I_3 & & \begin{matrix}a_{i-1}\\0\\0\end{matrix} \\ 0 & 0 & 0 & 1 \end{bmatrix} = \begin{bmatrix} 1 & 0 & 0 & a_{i-1} \\ 0 & 1 & 0 & 0 \\ 0 & 0 & 1 & 0 \\ 0 & 0 & 0 & 1 \end{bmatrix} $$

$$ {}^{P}_{i}T = \begin{bmatrix} & I_3 & & \begin{matrix}0\\0\\d_i\end{matrix} \\ 0 & 0 & 0 & 1 \end{bmatrix} = \begin{bmatrix} 1 & 0 & 0 & 0 \\ 0 & 1 & 0 & 0 \\ 0 & 0 & 1 & d_i \\ 0 & 0 & 0 & 1 \end{bmatrix} $$

Hence,

$$ {}^{i-1}_{i}T = \begin{bmatrix} c\theta_i & -s\theta_i & 0 & a_{i-1} \\ s\theta_i c\alpha_{i-1} & c\theta_i c\alpha_{i-1} & -s\alpha_{i-1} & -d_i s\alpha_{i-1} \\ s\theta_i s\alpha_{i-1} & c\theta_i s\alpha_{i-1} & c\alpha_{i-1} & d_i c\alpha_{i-1} \\ 0 & 0 & 0 & 1 \end{bmatrix} $$

3.5 Manipulator Kinematics – Forward Kinematics

Example: Consider the three-link planar arm from slide 14. Use the Denavit – Hartenberg parameters found in slide 16 to solve for the forward kinematics.

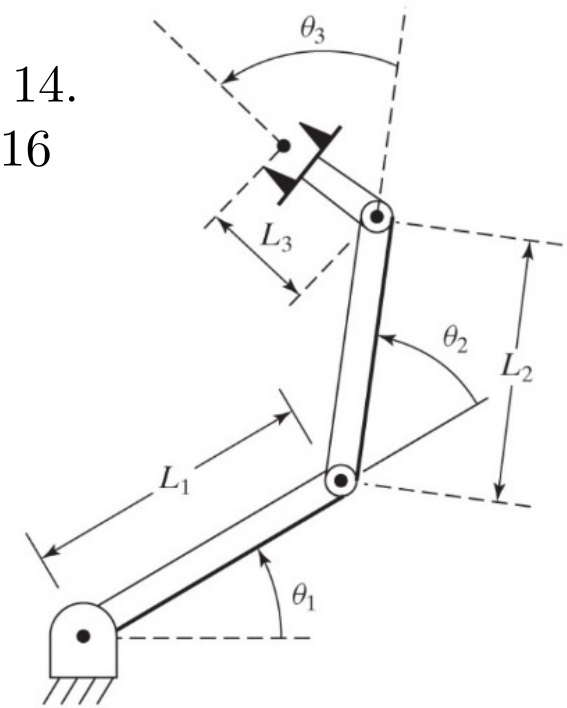

i	α_{i-1}	a_{i-1}	d_i	θ_i
1	0	0	0	θ_1
2	0	L_1	0	θ_2
3	0	L_2	0	θ_3
e.e.	0	L_3	0	0

Recalling ${}^{i-1}_{i}T$ from slide 19,

$$ {}^{i-1}_{i}T = \begin{bmatrix} c\theta_i & -s\theta_i & 0 & a_{i-1} \\ s\theta_i c\alpha_{i-1} & c\theta_i c\alpha_{i-1} & -s\alpha_{i-1} & -d_i s\alpha_{i-1} \\ s\theta_i s\alpha_{i-1} & c\theta_i s\alpha_{i-1} & c\alpha_{i-1} & d_i c\alpha_{i-1} \\ 0 & 0 & 0 & 1 \end{bmatrix} $$

$$ {}^{0}_{1}T = \begin{bmatrix} c\theta_1 & -s\theta_1 & 0 & 0 \\ s\theta_1 & c\theta_1 & 0 & 0 \\ 0 & 0 & 1 & 0 \\ 0 & 0 & 0 & 1 \end{bmatrix}, \quad {}^{1}_{2}T = \begin{bmatrix} c\theta_2 & -s\theta_2 & 0 & L_1 \\ s\theta_2 & c\theta_2 & 0 & 0 \\ 0 & 0 & 1 & 0 \\ 0 & 0 & 0 & 1 \end{bmatrix} $$

$$ {}^{2}_{3}T = \begin{bmatrix} c\theta_3 & -s\theta_3 & 0 & L_2 \\ s\theta_3 & c\theta_3 & 0 & 0 \\ 0 & 0 & 1 & 0 \\ 0 & 0 & 0 & 1 \end{bmatrix}, \quad {}^{3}_{e.e}T = \begin{bmatrix} 1 & 0 & 0 & L_3 \\ 0 & 1 & 0 & 0 \\ 0 & 0 & 1 & 0 \\ 0 & 0 & 0 & 1 \end{bmatrix} $$

$$ {}^{0}_{e.e}T = {}^{0}_{1}T \; {}^{1}_{2}T \; {}^{2}_{3}T \; {}^{3}_{e.e}T $$

$$ {}^{0}_{e.e}T = \begin{bmatrix} c(\theta_1+\theta_2+\theta_3) & -s(\theta_1+\theta_2+\theta_3) & 0 & L_1 c\theta_1 + L_2 c(\theta_1+\theta_2) + L_3 c(\theta_1+\theta_2+\theta_3) \\ s(\theta_1+\theta_2+\theta_3) & c(\theta_1+\theta_2+\theta_3) & 0 & L_1 s\theta_1 + L_2 s(\theta_1+\theta_2) + L_3 s(\theta_1+\theta_2+\theta_3) \\ 0 & 0 & 1 & 0 \\ 0 & 0 & 0 & 1 \end{bmatrix} $$

3.8 Standard Names for Frames

The Base Frame, $\{B\}$ – is located at the base of the manipulator. Another name for frame $\{0\}$. Sometimes, it is called link 0.

The Station Frame, $\{S\}$ – is located in a task relevant location. Sometimes it is called the *task frame*, the *world frame*, or the *universe frame*.

The Wrist Frame, $\{W\}$ – is affixed to the last link of the manipulator. Often, $\{W\}$ has its origin fixed at a point called the *wrist* of the manipulator and moves with the last link.

The Tool Frame, $\{T\}$ – is affixed to the end of any tool the robot happens to be holding.

The Goal Frame, $\{G\}$ – is a description of the location to which the robot is to move the tool.

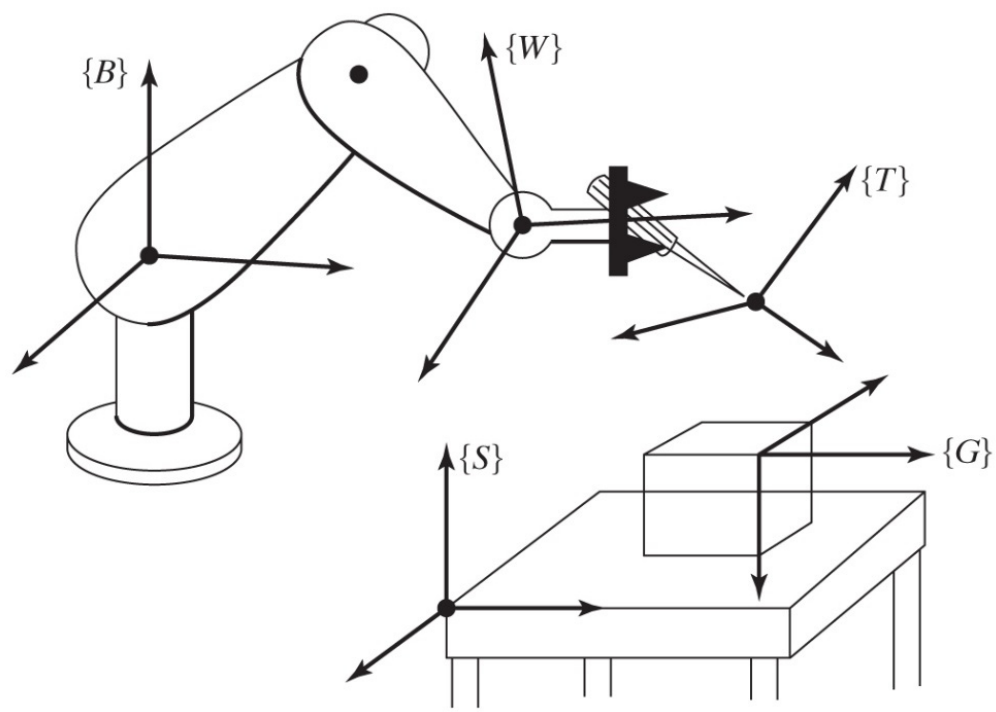

Let The Learning Continue